xylem

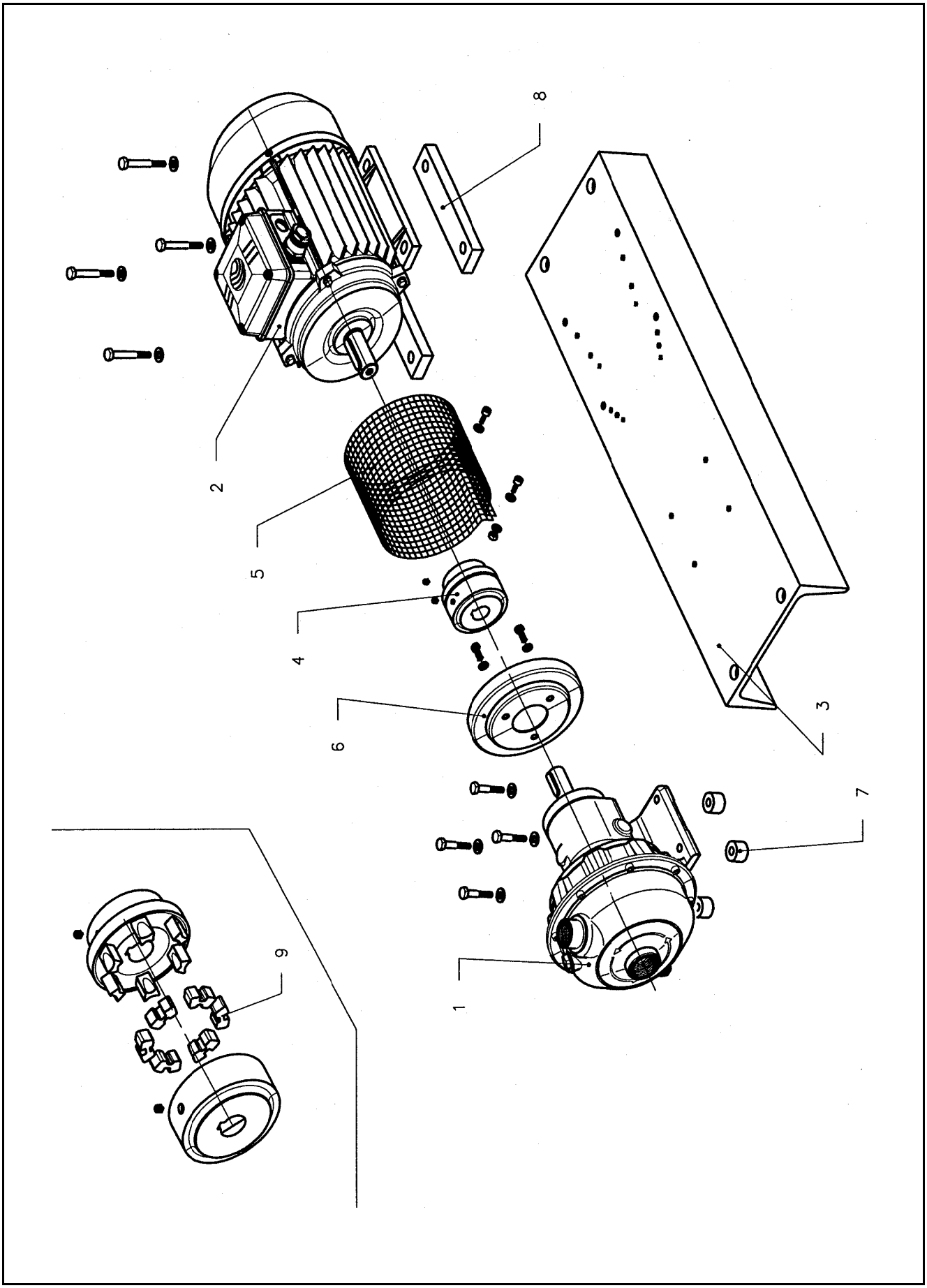

LOWARA

LOWARA

xylem

DESCRIZIONE - DESCRIPTION	COF / P: elettropompa - motorpump									
	1	2 **		3	4 *	5	6	7	8	9 *
Gruppo elettropompa Pump with motor	Pompa Pump	Motore Motor	Grandezza Size	Base Baseplate	Giunto Coupling	Coprigiunto Coupling guard	Disco protez. giunto Coupling guard disk	Spessori pmp Pmp Shims	Spessori motore Motor Shims	Kit tasselli per giunto Coupling block Kit
COF 350/03/A	107355330	107230420	SM71B3/304	161405770	157650100	164600240	160101230	4-161405790	4-161403170	148994400
COF 350/05/A	107355340	107230440	SM71B3/305	161405770	157650100	164600240	160101230	4-161405790	4-161403170	148994400
COF 350/07/A	107355350	107230460	SM80B3/307	161405110	157650090	164600240	160101230	4-161405790	4-161402720	148994400
COF 350/09/A	107355360	107230480	SM80B3/311	161405110	157650090	164600240	160101230	4-161405790	4-161402720	148994400
COF 350/11/A	107355370	107230480	SM80B3/311	161405110	157650090	164600240	160101230	4-161405790	4-161402720	148994400
COF 350/15/P	101827000	50000RA00	PLM90B3/315 IE2	161405120	157650000	164600240	160101230	4-161405790	2-161402340 + 2-161402400	148994400
COF 500/15/P	101827010	50000RA00	PLM90B3/315 IE2	161405120	157650000	164600240	160101230	4-161405790	2-161402340 + 2-161402400	148994400
COF 500/22/P	101827020	50001RA00	PLM90B3/322 IE2	161405120	157650000	164600240	160101230	4-161405790	2-161402340 + 2-161402400	148994400
COF 500/30/P	101827030	50007RA00	PLM100B3/330 IE2	161405140	157650010	164600250	160101230	4-161405790	2-161402360 + 2-161402380	148994410

* Parti di ricambio consigliate - Recommended spare parts.